Customer:	Customer NO.:	Customer Approve By:	REV.	DESCRIPTION OF MODIFY	MODIFY BY:	DATE
			AO	1'ST DESIGN	LXH	2007.03.14

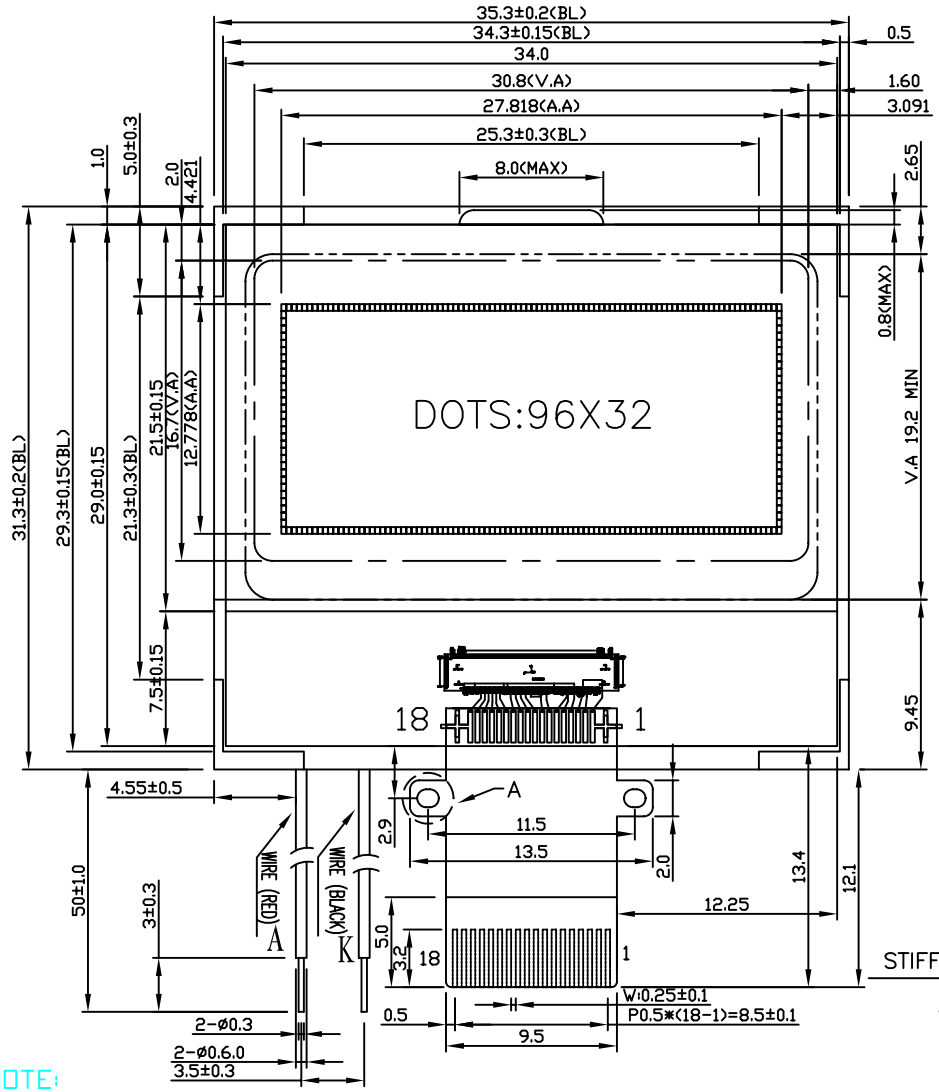

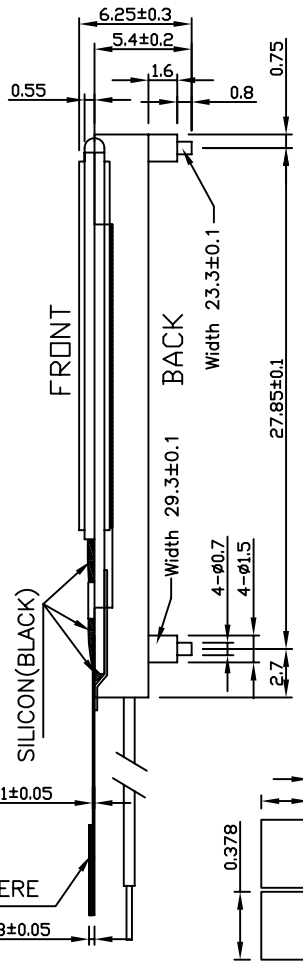

PIN FUNCTION:

PIN	SYMBOL	PIN	SYMBOL
1	RESETB	10	C1+
2	CS1B	11	C2+
3	RS	12	C2-
4	VDD	13	V1
5	SCLK	14	V2
6	SID	15	V3
7	VSS	16	V4
8	VOUT	17	V0
9	C1-	18	VR

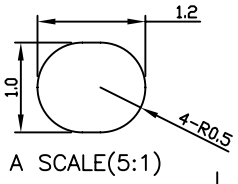

A SCALE(5:1)

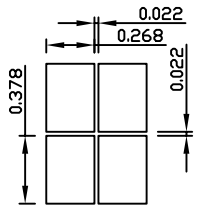

SCALE(10:1)

LOGIC:

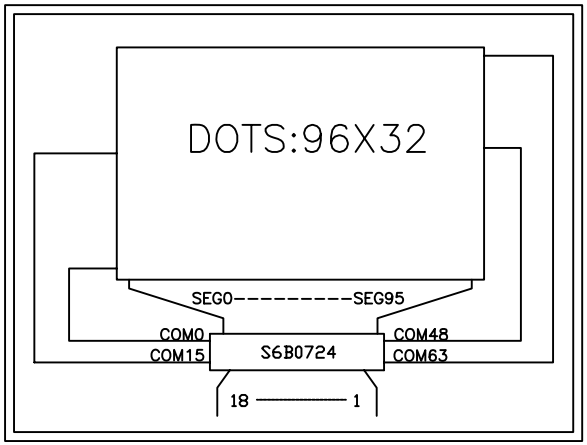

NOTE:

1.DISPLAY TYPE: FSTN\POSITIVE
2.LCD POLARIZER TYPE: TRANSFLECTIVE
3.VIEWING DIRECTION: 6.00 O'CLOCK
4.LCD OPERATING VOLTAGE: VDD=3.0V;VOP=7.5V
5.OPERATING TEMP: -20~70°C
.STORAGE TEMP: -30~+80°C
6.DRIVE METHOD 1/33DUTY,1/6BIAS
7.LCD CONNECTOR: COG/FPC+BL
8.DISPLAY DRIVER: S6B0724
9.BLACK LIGHT: Y-G Edge(LED x 4)
10.Unspecified tolerance is ±0.20mm Vf=2.0±0.2;If=60mA.
11.ROHS Request

飞优特科技(深圳)有限公司
FUTURE S&T(SHEN ZHEN)CO.,LTD
TEL: +86-755-29675886, FAX: +86-755-29675495
E-mail:futurelcd@21cn.com

		CD	
UNIT: MM		SIZE: A4	
SHEET: 1 OF 1			
LCM NO.: FG963201-FGBY	DWG NO.: G963201-FGBY-CD	REV: AO	
DRAWN BY:	CHECKED BY:	APPROVED BY:	